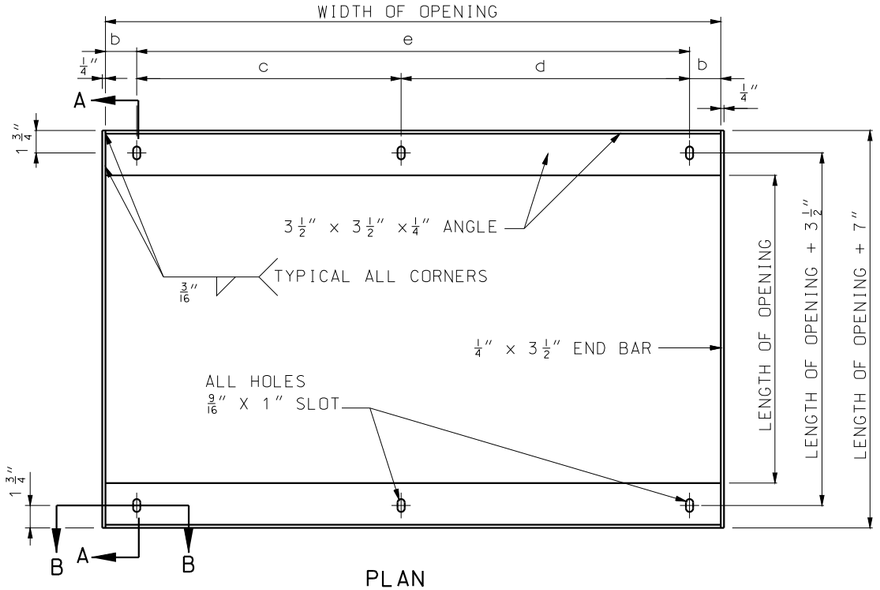

PLAN
BEARING PLATE

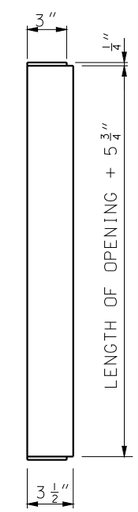

END VIEW OF BEARING BAR

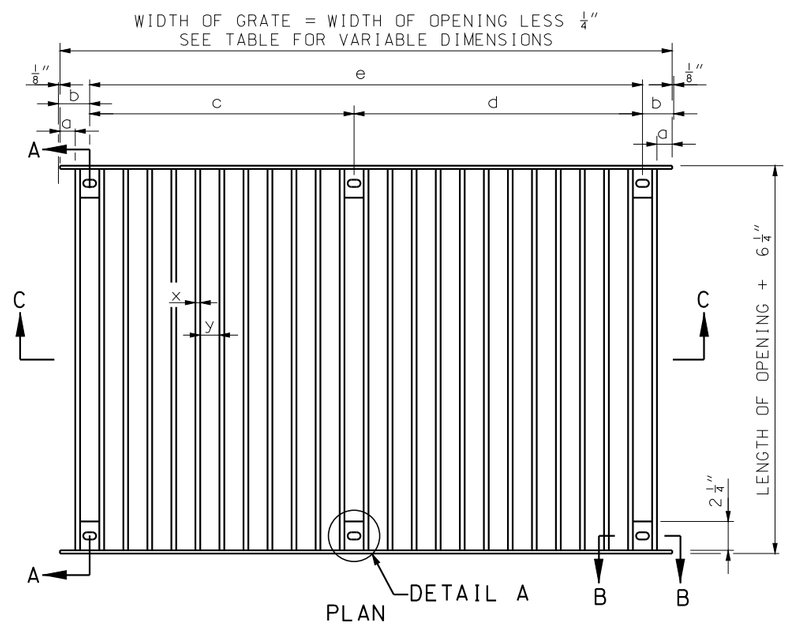

PLAN

SECTION C-C
GRATE

WEIGHT AND DIMENSIONS DATA

OPENING WIDTH	OPENING LENGTH	WEIGHT (1) LBS.	BEARING BARS x	BEARING BARS y	BEARING BARS LENGTH	BEARING BARS NUMBER	DIMENSIONS a	DIMENSIONS b	DIMENSIONS c	DIMENSIONS d	DIMENSIONS e	REMARKS
3'-0"	2'-0"	190	3/8"	3"	2'-5 3/4"	11	13/16"	2 13/16"			2'-6 3/8"	USE WITH TYPE S-1 INLETS AND TYPE S HEADWALLS
3'-0"	3'-0"	330	5/8"	3"	3'-5 3/4"	10	1 1/4"	3 1/2"			2'-5"	
5'-0"	2'-0"	300	3/8"	3"	2'-5 3/4"	18	1"	3"	2'-3"	2'-3"		
5'-0"	3'-0"	550	5/8"	3"	3'-5 3/4"	17	9/16"	2 13/16"	2'-1 3/8"	2'-5"		
3'-1"	2'-1"	200	3/8"	3"	2'-6 3/4"	11	1 5/16"	3 5/16"			2'-6 3/8"	USE WITH TYPE S-2 AND TYPE S-3 INLETS ONLY
3'-1"	3'-1"	340	5/8"	3"	3'-6 3/4"	10	1 3/4"	4"			2'-5"	
5'-1"	2'-1"	310	3/8"	3"	2'-6 3/4"	18	1 1/2"	3 1/2"	2'-3"	2'-3"		
5'-1"	3'-1"	560	5/8"	3"	3'-6 3/4"	17	1 1/16"	3 5/16"	2'-1 3/8"	2'-5"		

(1) THE WEIGHT OF THE GRATE AND BEARING PLATE INCLUDES THE BOLTS, NUTS, AND WASHERS AND SHALL BE AS SHOWN WITH A TOLERANCE OF 5 PERCENT.

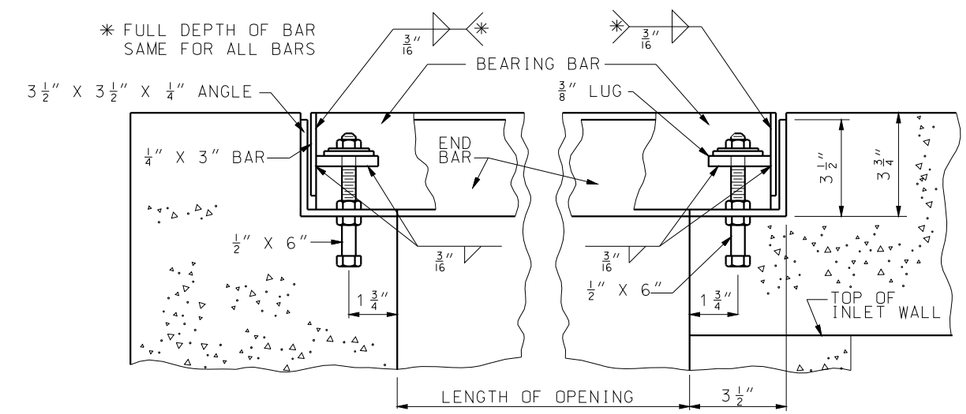

SECTION A-A

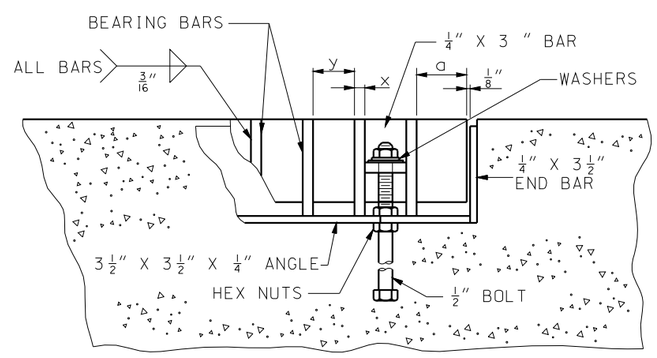

SECTION B-B

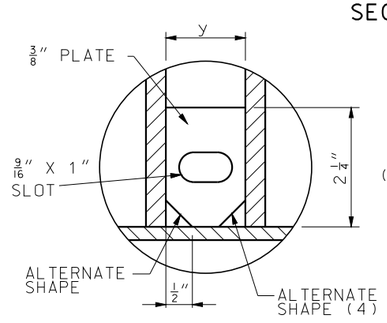

DETAIL A

(4) OTHER ALTERNATE SHAPES ARE ALLOWED, UPON APPROVAL, PROVIDED 4 LINEAR INCHES WELD IS MAINTAINED SYMETRICALLY AROUND THE PLATE AND THE NOMINAL DIMENSIONS OF THE PLATE AND SLOT ARE MAINTAINED.

GENERAL NOTES:

WHEN BOLTS ARE CUT IN THE FIELD, THREADS MUST BE CLEANED TO PERMIT THE FINAL NUT TO RUN FREELY ON THE BOLT.

THE WELDING REQUIREMENTS SHOWN ON THIS DRAWING ARE FOR PAINTED GRATES AND BEARING PLATES. IF GALVANIZED, ALL TIGHTLY CONTACTING SURFACES SHALL BE COMPLETELY SEALED, ON ALL SIDES BY WELDING, PRIOR TO GALVANIZING.

MISSOURI HIGHWAYS AND TRANSPORTATION COMMISSION
105 WEST CAPITOL
JEFFERSON CITY, MO 65102
1-888-ASK-MODOT (1-888-275-6636)

STATE OF MISSOURI
KATHRYN PHILLIPS HARVEY
NUMBER PE-23751
PROFESSIONAL ENGINEER
THIS SHEET HAS BEEN SIGNED, SEALED AND DATED ELECTRONICALLY.

GRATES AND BEARING PLATES

DATE EFFECTIVE: 12/01/2005
DATE PREPARED: 8/21/2009

614.10T

SHEET NO. 1 OF 1

IF A SEAL IS PRESENT ON THIS SHEET IT HAS BEEN ELECTRONICALLY SEALED AND DATED.