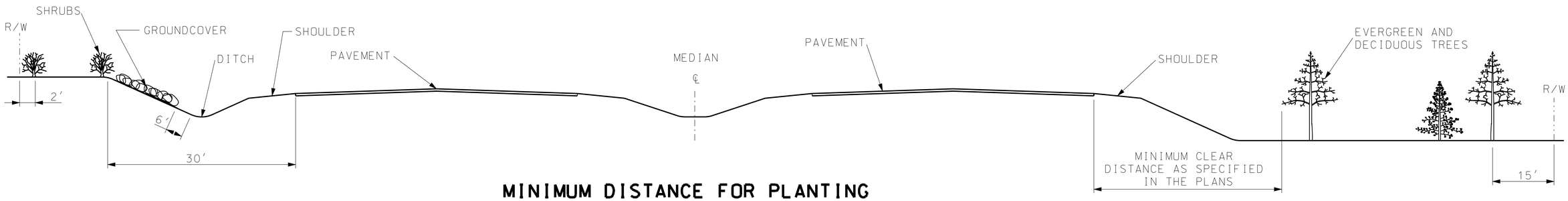

MINIMUM DISTANCE FOR PLANTING ON TYPICAL CROSS SECTION

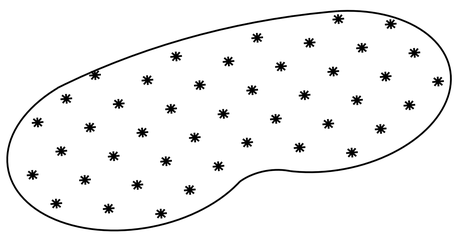

LOCATION OF SHRUBS
IN A TYPICAL PLANT BED

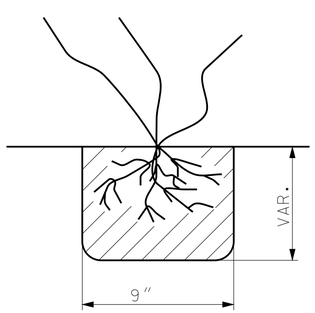

VINES AND SEEDLINGS

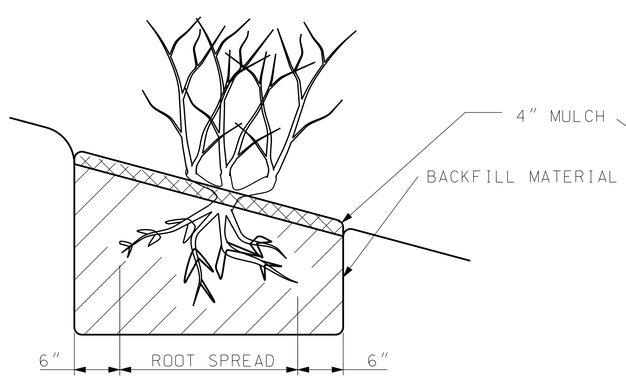

DECIDUOUS SHRUB
SLOPE PLANTING

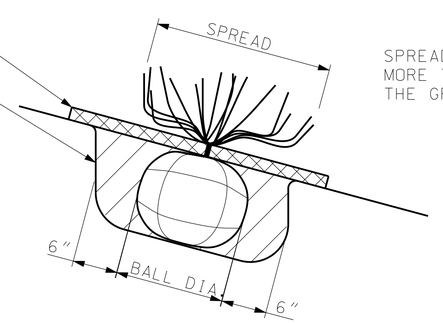

SPREAD MEASURED NO
MORE THAN 10″ ABOVE
THE GROUND LINE.

EVERGREEN SHRUB
SLOPE PLANTING

MISSOURI HIGHWAYS AND TRANSPORTATION COMMISSION
105 WEST CAPITOL
JEFFERSON CITY, MO 65102
1-888-ASK-MODOT (1-888-275-6636)

STATE OF MISSOURI
KATHRYN PHILLIPS HARVEY
NUMBER PE-23751
PROFESSIONAL ENGINEER
THIS SHEET HAS BEEN SIGNED, SEALED AND DATED ELECTRONICALLY.

TYPICAL PLANTING ILLUSTRATIONS

LOCATION AND
SLOPE PLANTING

DATE EFFECTIVE: 07/01/2004
DATE PREPARED: 8/26/2009

808.00

SHEET NO.
3 OF 3

IF A SEAL IS PRESENT ON THIS SHEET IT HAS BEEN ELECTRONICALLY SEALED AND DATED.