LACLEDE COUNTY ROUTE N
MILL CREEK
CONSTRUCTION STARTS EARLY JUNE 2012

EXISTING BRIDGE

PROPOSED BRIDGE TYPICAL SECTION

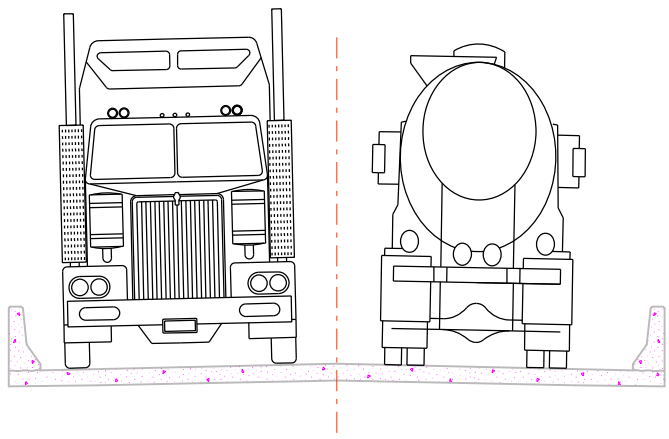

EXISTING BRIDGE FACTS

ROUTE N – BRIDGE # N0340

- Existing Bridge was constructed in 1957
- Length = 147′ and Width = 20′

PROPOSED BRIDGE FACTS

ROUTE N – NEW BRIDGE # B0448

- Construction year 2012
- Bridge Replacement
- Construction Duration: Approximately 44 days
- Length = 160′ and Width = 24′

DETOUR

SUGGESTED DETOUR ROUTE

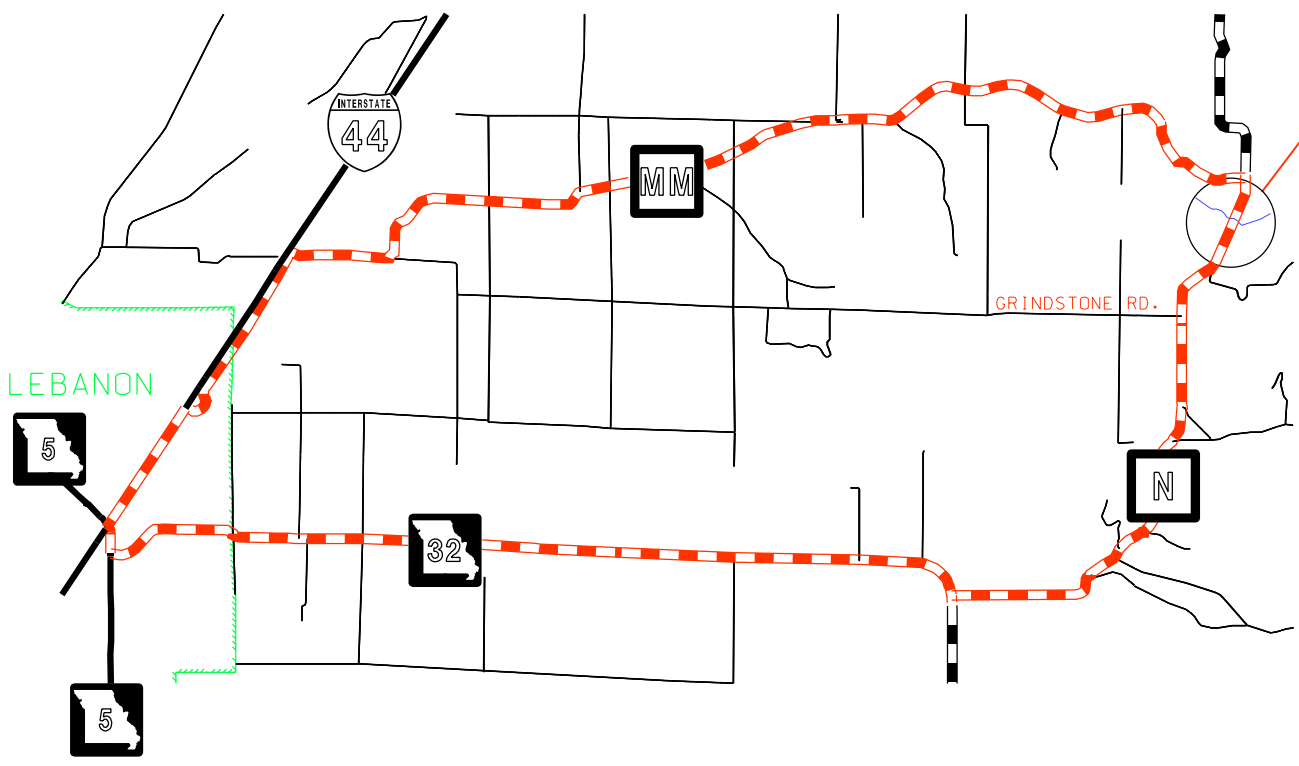

BRIDGE LOCATION

MoDOT

SAFE & SOUND