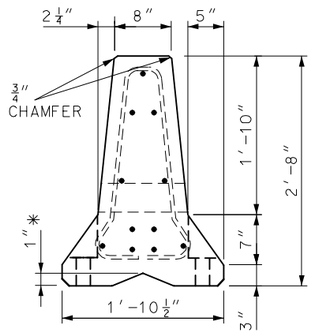

SECTION B-B
* V-NOTCH OPTIONAL

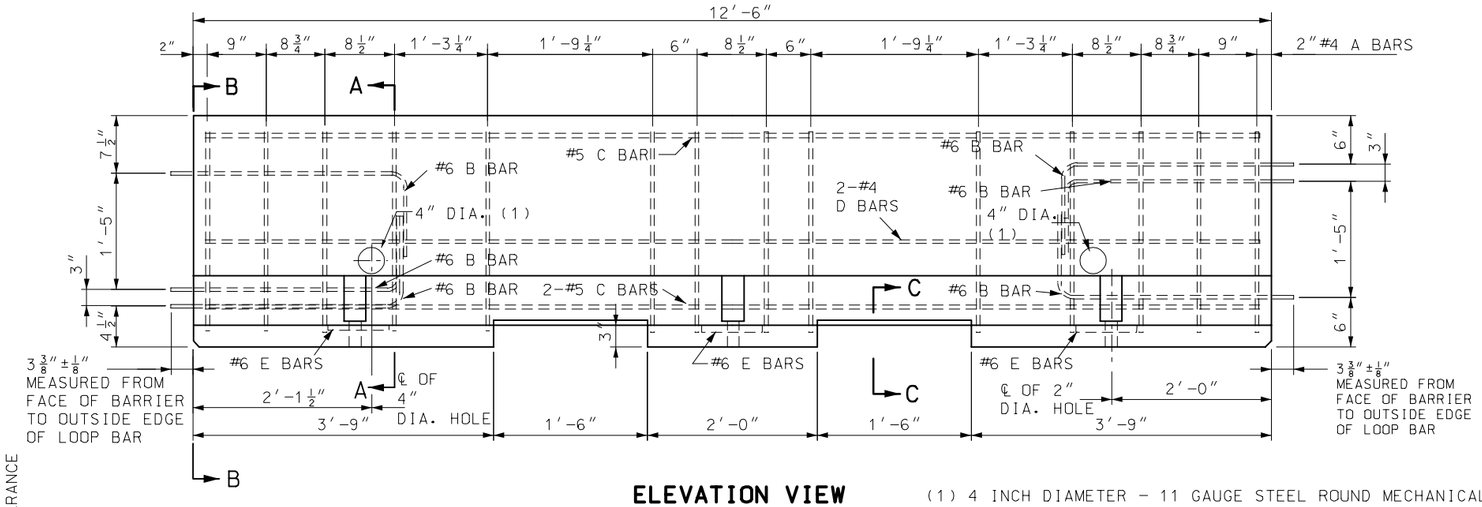

ELEVATION VIEW

(1) 4 INCH DIAMETER - 11 GAUGE STEEL ROUND MECHANICAL TUBING SLEEVE. THESE HOLES ARE OPTIONAL.

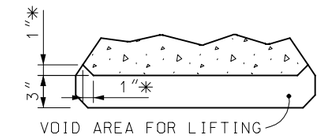

PART SECTION C-C
LIFTING SLOT DETAIL
* RADIUS EDGER TO PREVENT SPALLING

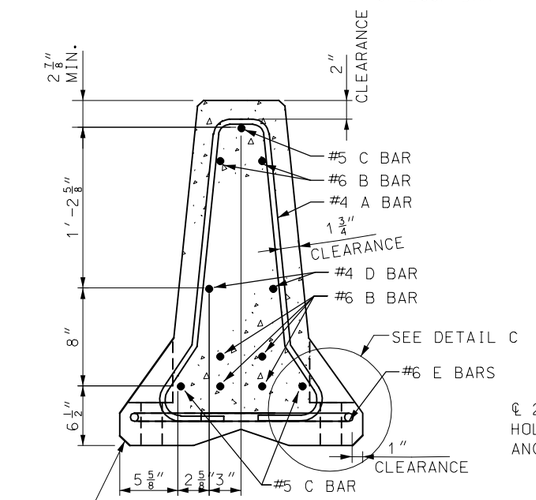

SECTION A-A
STIRRUP PLACEMENT
WITH BAR REINFORCEMENT

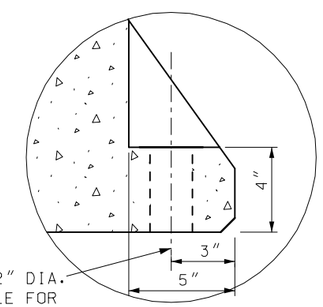

DETAIL C

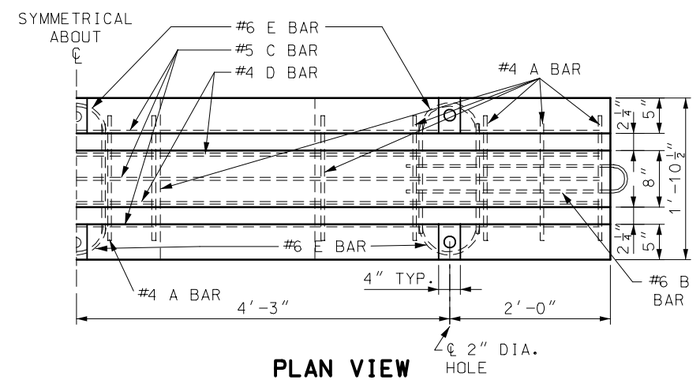

PLAN VIEW

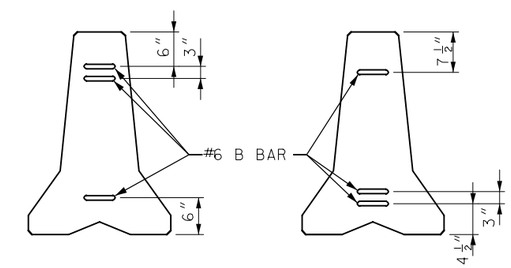

ALTERNATING END VIEWS FOR BARRIER LOOP CONNECTION

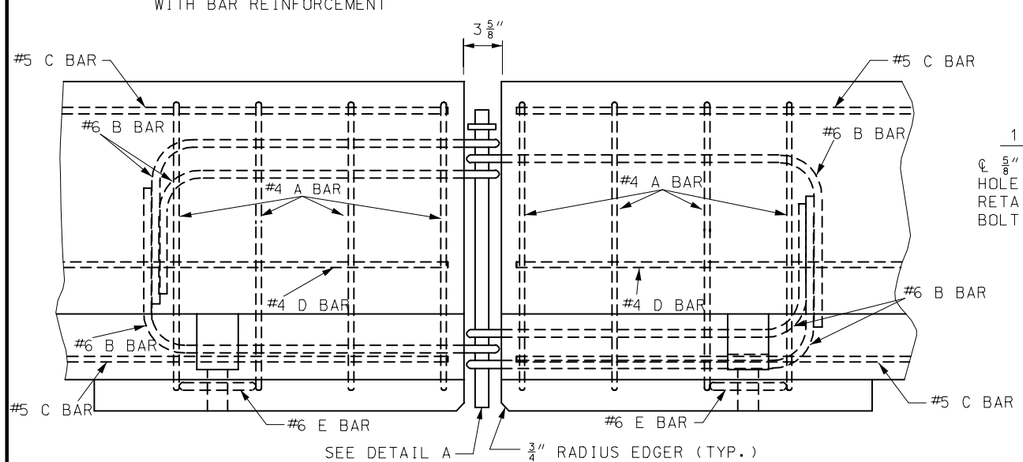

DETAILS OF BARRIER CONNECTION

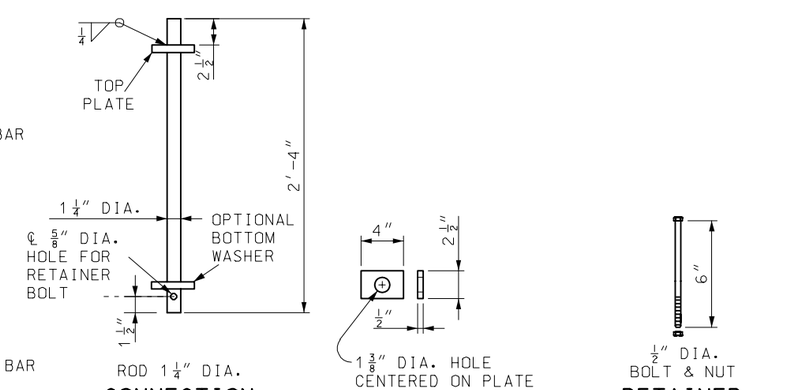

NOTE: RETAINER BOLT AND BOTTOM WASHER AT CONTRACTOR'S OPTION.

DETAIL A
CONNECTION ROD ASSEMBLY

GENERAL NOTES:

ALL REINFORCING SHALL MEET REQUIREMENTS OF CRSI EXCEPT WHERE SHOWN ON PLANS.

REINFORCING STEEL CLEARANCE TO EDGE OF CONCRETE SHALL BE 1 3/4" UNLESS OTHERWISE SHOWN.

AT NO TIME SHALL THE BARRIERS BE LIFTED OR MOVED BY USE OF THE LOOP BARS.

THE SECTION FURNISHED SHALL COMPLY WITH DIMENSIONS SHOWN, AS APPROVED BY THE ENGINEER.

SEE SHEET 3 FOR DELINEATOR DETAILS.

MISSOURI HIGHWAYS AND TRANSPORTATION COMMISSION

TEMPORARY CONCRETE TRAFFIC BARRIER
TYPE F

DATE:_____ | EFFECTIVE: 01-01-2004 | **617.20B** | 1/6

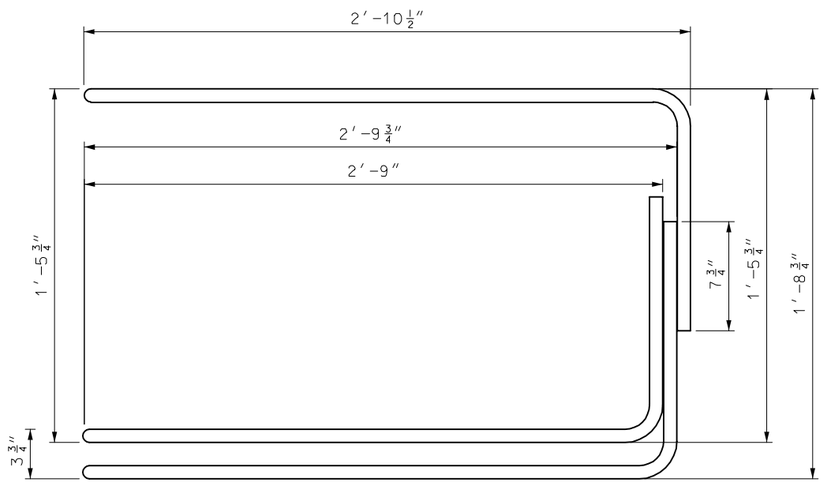

#6 B BAR ELEVATION

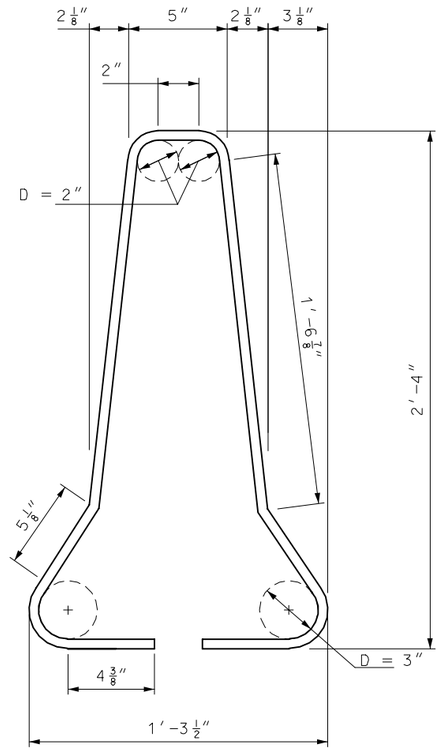

#4 A BARS

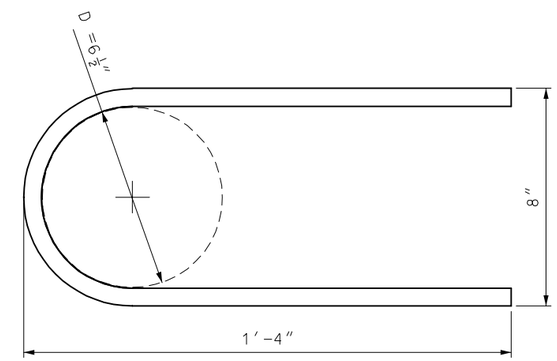

#6 E BAR

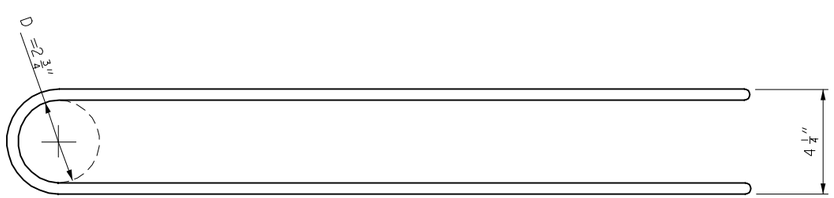

#6 B BAR PLAN

REINFORCING BARS PER 12′- 6″ BARRIER SECTION					
MARK	BAR SIZE	NO. OF BARS	SHAPE OF EACH	LENGTH EACH (NOM.)	WEIGHT
A	4	14		6′-5″	60.8 lbs
C	5	3		12′-2″	38.1 lbs
D	4	2		12′-2″	16.3 lbs
E	6	6		2′-11″	26.3 lbs
LOOP ASSEMBLY					
B	6	6		7′-10″	70.5 lbs

CONCRETE VOLUME 1.3 CU YDS APPROXIMATE WEIGHT 5601 LBS.

GENERAL NOTES:

DIMENSIONS ARE OUT TO OUT OF BARS UNLESS OTHERWISE NOTED.

MISSOURI HIGHWAYS AND TRANSPORTATION COMMISSION

TEMPORARY CONCRETE TRAFFIC BARRIER
TYPE F

DATE:_____ EFFECTIVE: 01-01-2004 **617.20B** 2/6

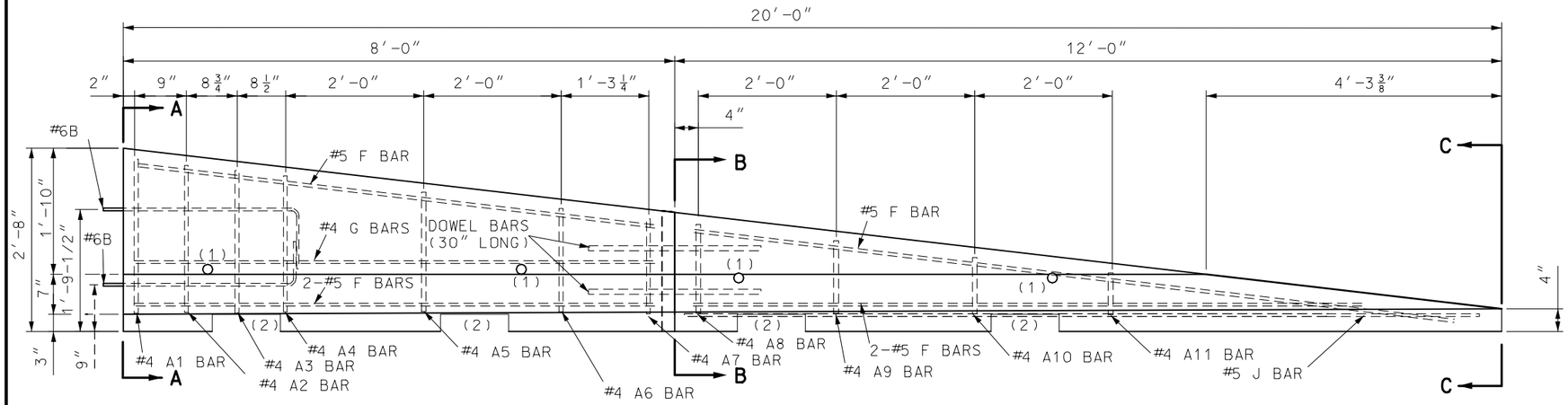

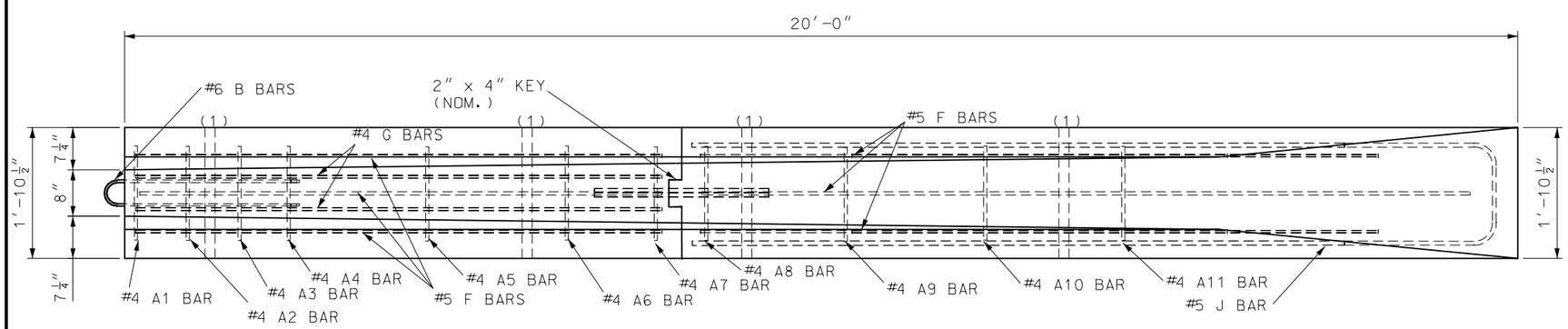

PRECAST BARRIER HEIGHT TRANSITION
(TEMPORARY INSTALLATIONS ONLY)

(1) OPTIONAL 4 INCH DIAMETER, 11 GUAGE STEEL ROUND MECHANICAL TUBING SLEEVE FOR LIFT HOLE ALLOWED. THE LOCATION OF THE HOLE MAY VARY TO ACCOMMODATE THE DIFFERING WEIGHT DISTRIBUTIONS OF TRANSITION SECTIONS.

(2) 3" X 1'-0" SLOTS FOR LIFTING - TWO PER SECTION. LOCATION TO BE DETERMINED BY CONTRACTOR.

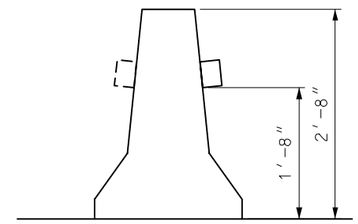

TRAFFIC BARRIER DELINEATORS

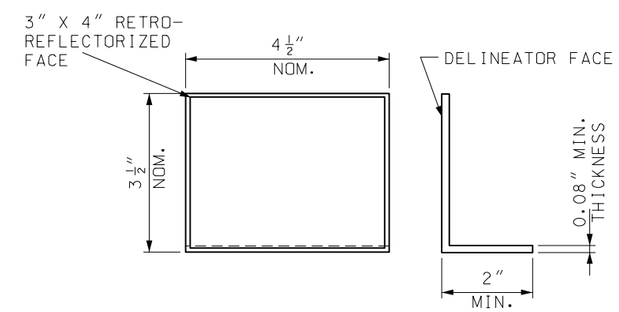

DELINEATOR

GENERAL NOTES:

REINFORCING STEEL CLEARANCE TO EDGE OF CONCRETE SHALL BE 1-3/4" UNLESS OTHERWISE SHOWN.

HEIGHT TRANSITIONS SHALL NOT BE USED ON INTERSTATE ROUTES OR IN LOCATIONS WHERE THE POSTED SPEED PRIOR TO CONSTRUCTION IS GREATER THAN 35 MPH.

AT NO TIME SHALL THE BARRIERS BE LIFTED OR MOVED BY USE OF THE LOOP BARS.

RETAINER BOLT AND NUT MUST BE USED WITH TRANSITION BARRIER.

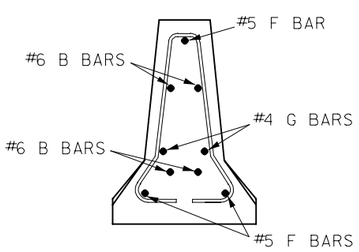

SECTION A-A

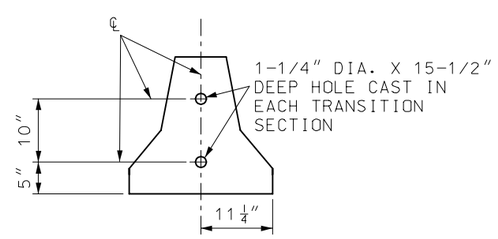

SECTION B-B

NOTE: SECTIONS TO BE CONNECTED WITH TWO- 1" DIA. BARS OR #8 REINFORCING BARS 30" LONG IN 1-1/4" DIA. HOLES AS SHOWN.

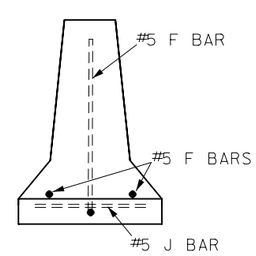

SECTION C-C

MISSOURI HIGHWAYS AND TRANSPORTATION COMMISSION

TEMPORARY CONCRETE TRAFFIC BARRIER

TYPE F HEIGHT TRANSITIONS

DATE:_____ EFFECTIVE: 01-01-2004 **617.20B** 3/6

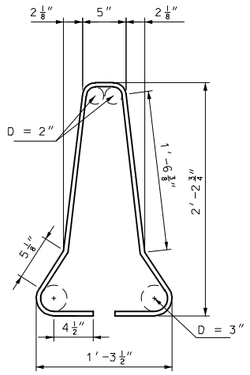

#4 A1 BAR

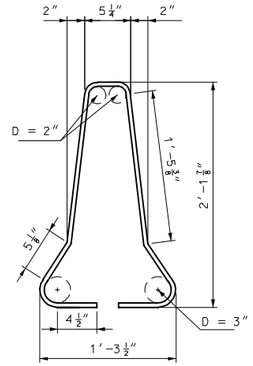

#4 A2 BAR

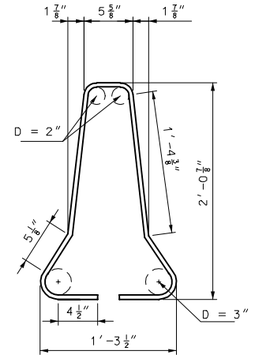

#4 A3 BAR

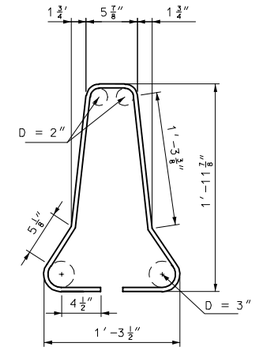

#4 A4 BAR

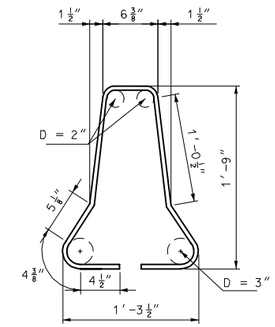

#4 A5 BAR

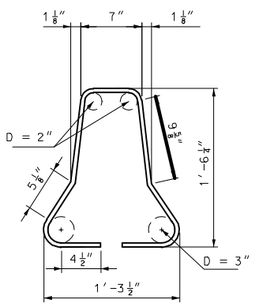

#4 A6 BAR

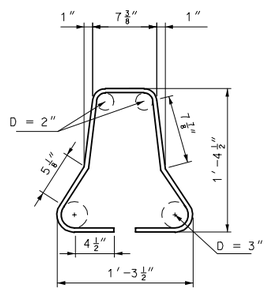

#4 A7 BAR

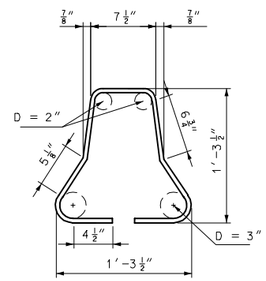

#4 A8 BAR

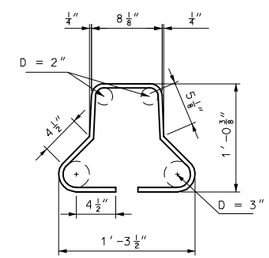

#4 A9 BAR

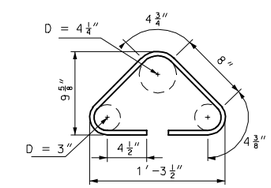

#4 A10 BAR

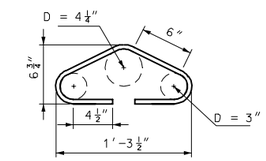

#4 A11 BAR

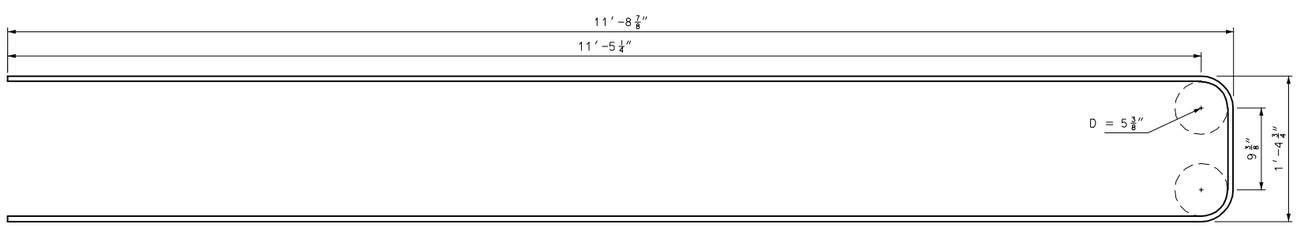

#5 J BAR

NOTE: FOR DETAILS OF B BARS, SEE SHEET 2 OF 4.

NOTE:

DIMENSIONS ARE OUT TO OUT OF BARS UNLESS OTHERWISE NOTED.

MISSOURI HIGHWAYS AND TRANSPORTATION COMMISSION

TEMPORARY CONCRETE TRAFFIC BARRIER

TYPE F HEIGHT TRANSITIONS

DATE:_____ EFFECTIVE: 07-01-2003 **617.20B** 4/6

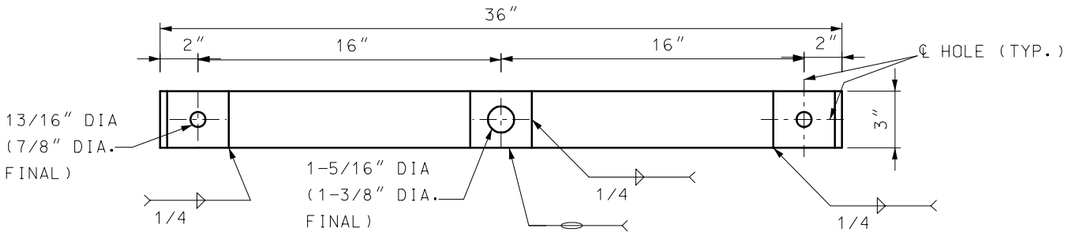

PLAN OF TIE-DOWN STRAP

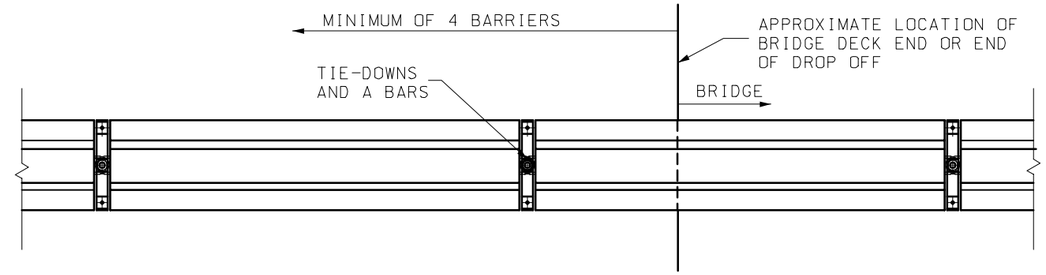

PLAN OF TRANSITION FOR FREE-STANDING BARRIER
TO TIE-DOWN BARRIER

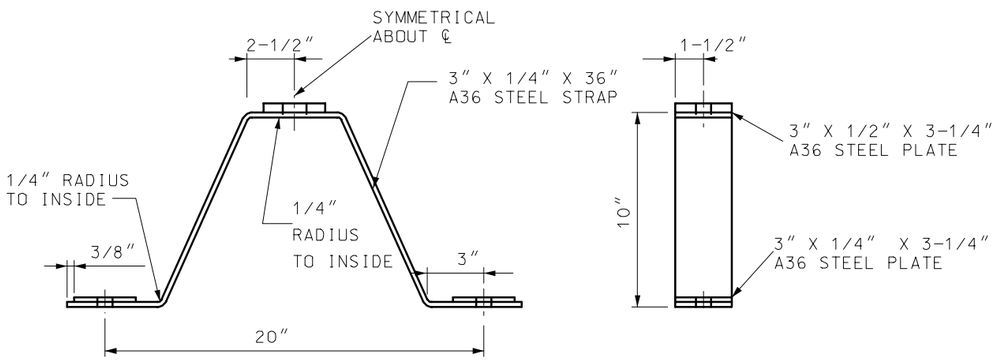

SIDE VIEW

DETAILS OF TYPE F TEMPORARY BARRIER TIE-DOWN STRAP

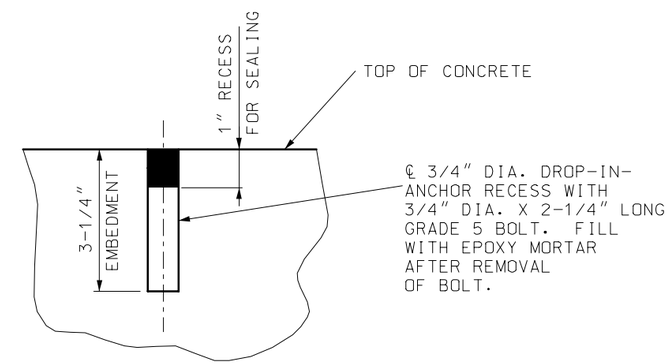

DETAIL SHOWING SEALING OF HOLES
AFTER REMOVAL OF TIE-DOWN BOLTS

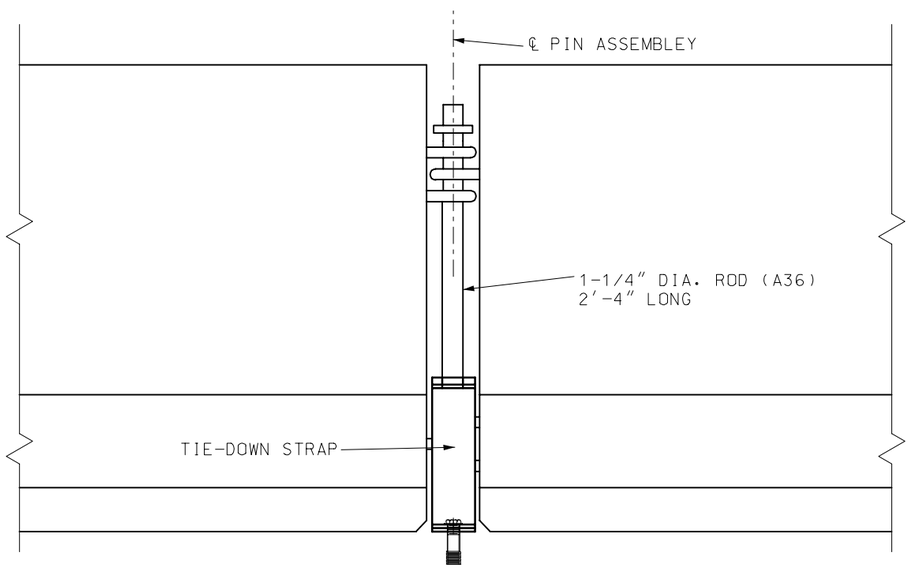

PART ELEVATION OF TEMPORARY BARRIER

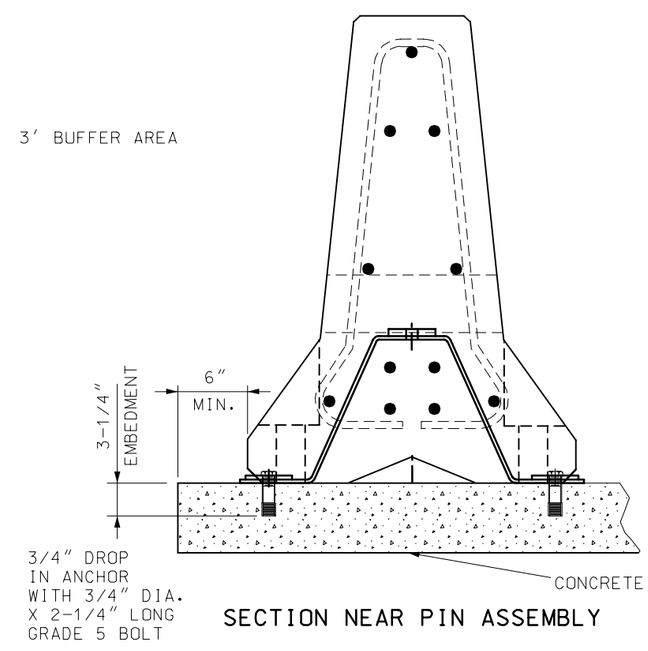

SECTION NEAR PIN ASSEMBLY

GENERAL NOTES:

CONTRACTOR SHALL VERIFY ALL DIMENSIONS IN FIELD BEFORE ORDERING NEW MATERIAL.

COST OF FURNISHING AND INSTALLING THE TIE-DOWN SYSTEM COMPLETE-IN-PLACE WILL BE CONSIDERED INCIDENTAL TO OTHER PAY ITEMS.

SEE OTHER SHEETS FOR DETAILS NOT SHOWN.

TIE-DOWN STRAP:
BARRIERS SHALL BE PULLED TIGHT DURING INSTALLATION TO REMOVE SLACK AND PROVIDE LONGITUDINAL TENSION DURING IMPACT.

MISSOURI HIGHWAYS AND TRANSPORTATION COMMISSION

TEMPORARY CONCRETE TRAFFICE BARRIER
TIE-DOWN STRAP

DATE:_____ | EFFECTIVE: 01-01-2004 | **617.20B** | 5/6

TIE-DOWN STRAP

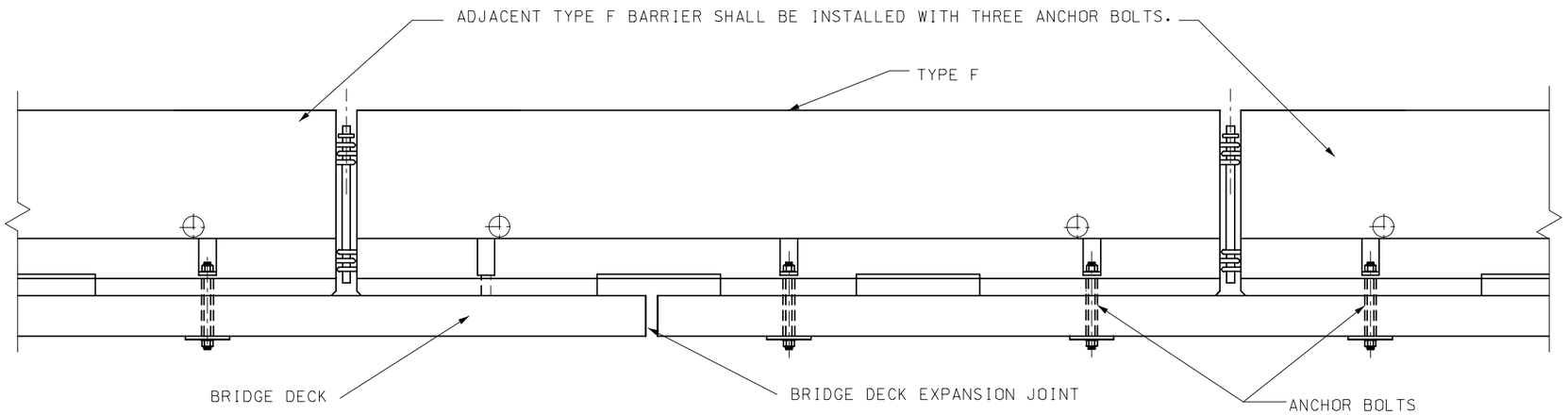

BOLT THROUGH DECK AT THERMAL EXPANSION JOINTS

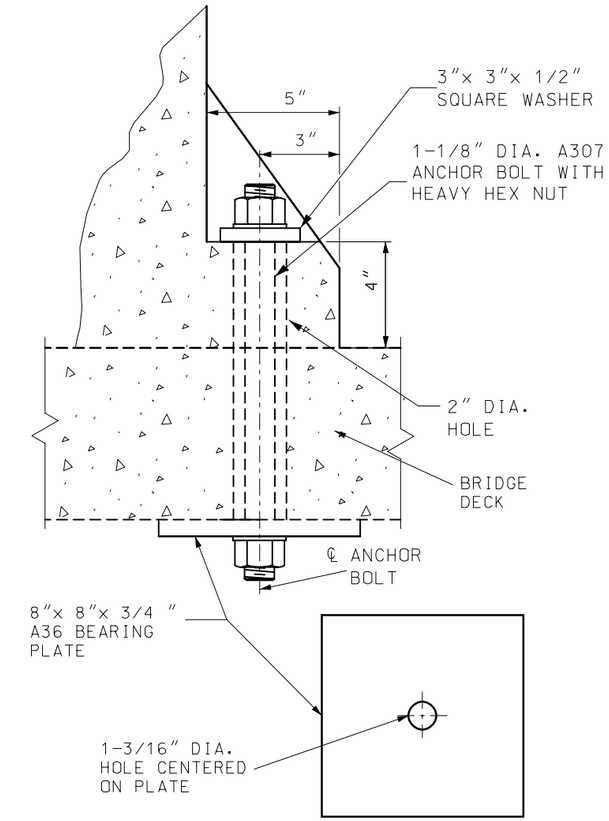

BOLT THROUGH DECK DETAIL

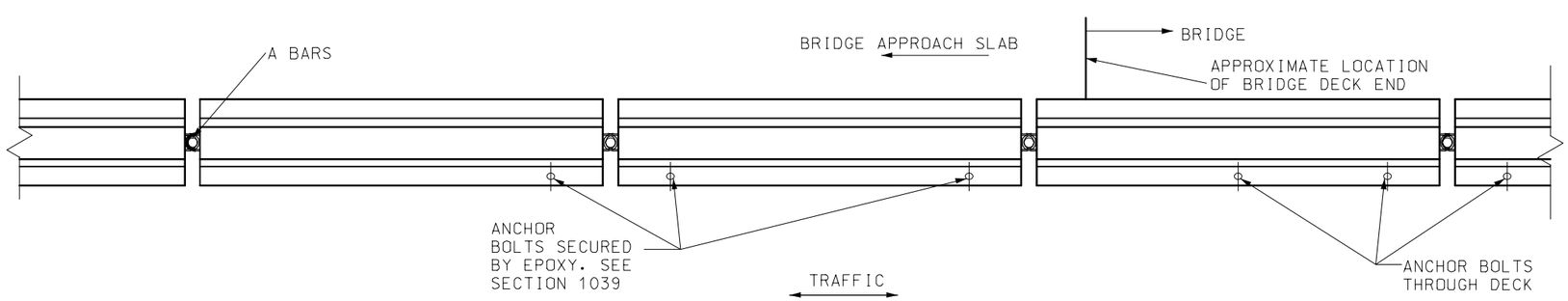

PLAN OF TRANSITION FOR BRIDGE DECK FROM FREE-STANDING TYPE F TO TYPE F WITH ANCHOR BOLT

GENERAL NOTES:

CONTRACTOR SHALL VERIFY ALL DIMENSIONS IN FIELD BEFORE ORDERING NEW MATERIAL.

COST OF FURNISHING AND INSTALLING THE ANCHOR SYSTEM COMPLETE-IN-PLACE WILL BE CONSIDERED INCIDENTAL TO OTHER PAY ITEMS.

SEE OTHER SHEETS FOR DETAILS NOT SHOWN.

TRANSITION FROM FREE-STANDING BARRIER TO BARRIER WITH ANCHOR BOLTS.

EPOXY SHALL BE 6K PSI AND APPLIED ACCORDING TO MANUFACTURER'S SPECIFICATIONS.

MISSOURI HIGHWAYS AND TRANSPORTATION COMMISSION

TEMPORARY CONCRETE TRAFFIC BARRIER

ANCHORING SYSTEMS

DATE:_____ | EFFECTIVE: 01-01-2004 | **617.20B** | 6/6