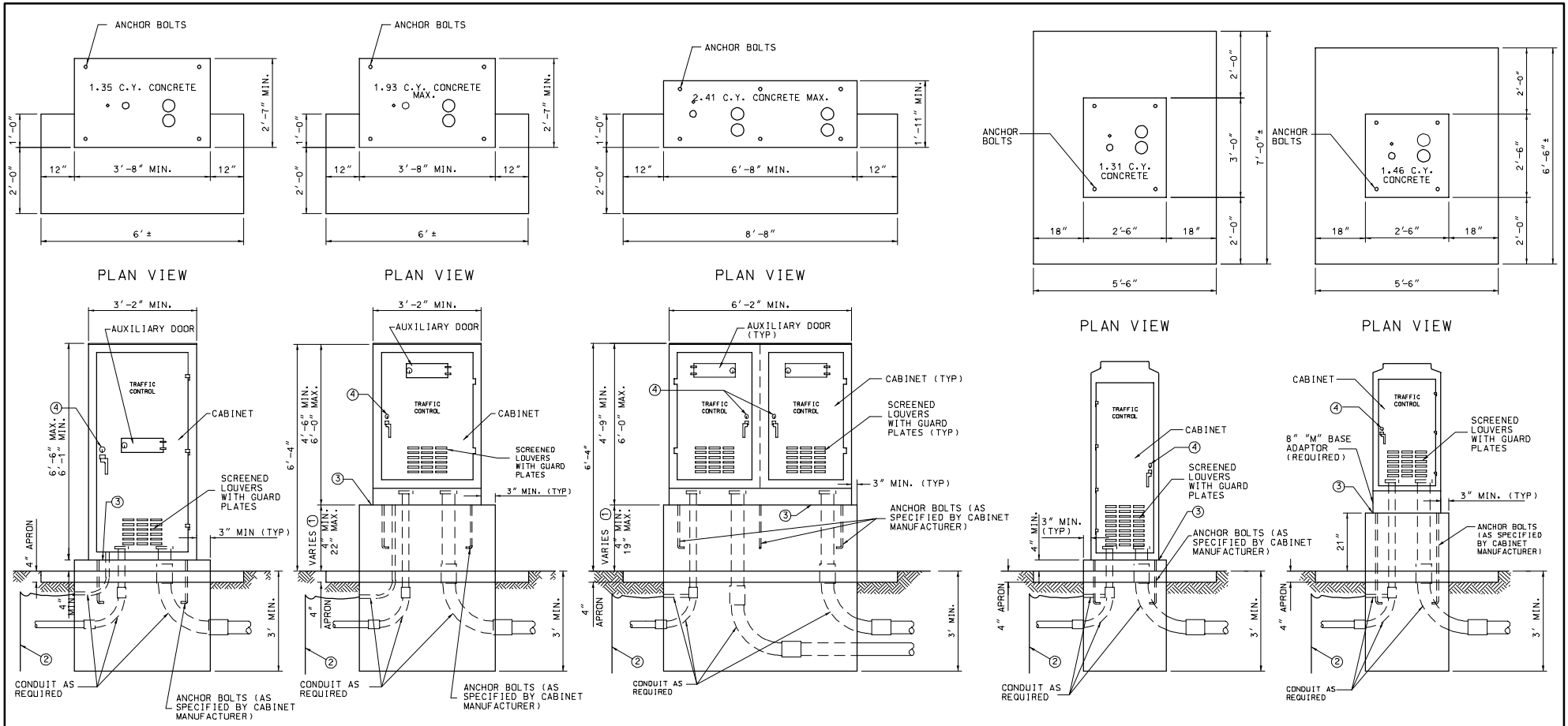

FOR CONTROLLER CABINETS WITH HEIGHTS FROM 6'-1" TO 6'-6"
TYPE E

FOR CONTROLLER CABINETS WITH HEIGHTS FROM 4'-4" TO 6'-0"
TYPE EV

DOUBLE

FOR TYPE 170 CONTROLLER CABINETS
TYPE 332

FOR TYPE 170 CONTROLLER CABINETS
TYPE 336S

CONTROLLER CABINETS AND BASE TYPES

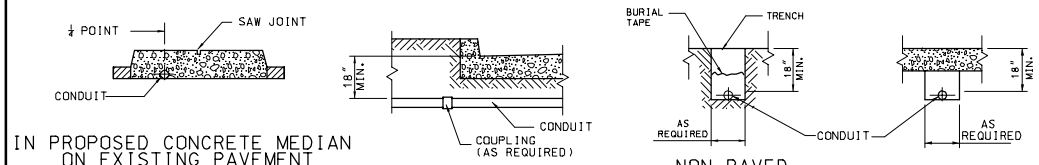

IN PROPOSED CONCRETE MEDIAN ON EXISTING PAVEMENT

0.5% MINIMUM SLOPE

NON-PAVED SURFACED

PAVED SURFACE

CONDUIT LOCATIONS

NOTES:

1. DIMENSION VARIES ACCORDING TO CABINET HEIGHT.
2. GROUND ROD. ¾" DIA. x 8' MIN. IF SUBSURFACE CONDITIONS EXIST WHICH PROHIBIT THE PLACEMENT OF THE GROUND ROD IN A VERTICAL POSITION, THE ROD MAY BE DRIVEN AT AN OBLIQUE ANGLE NOT TO EXCEED 45 DEGREES FROM VERTICAL OR BURIED IN A TRENCH AT LEAST 30 IN. DEEP. CONNECTION TO GROUND ROD SHALL BE CADWELDED.
3. LIFETIME SILICONE CAULK BETWEEN CABINET AND BASE.
4. #2 CORBIN LOCK

MISSOURI HIGHWAYS AND TRANSPORTATION COMMISSION

TRAFFIC SIGNALS
CONTROLLERS
CONDUIT LOCATION

DATE:_____ EFFECTIVE: 07-01-2004 902.10P 1/1